SiT9365

Standard Frequency Ultra-low Jitter Differential Oscillator

Features

- 32 standard frequencies from 25 MHz to 325 MHz. For additional frequencies below from 1 to 220.00000 MHz, refer to SiT9366 datasheet. For frequencies from 220.000001 to 725 MHz, refer to SiT9367 datasheet.
- LVPECL, LVDS and HCSL output signaling
- 0.1 ps RMS phase jitter (random) for Ethernet applications
- Contact SiTime for ±10 ppm frequency stability
- Wide temperature ranges from -40°C to 105°C
- Industry-standard packages: 3.2 x 2.5 mm, 7.0 x 5.0 mm and 5.0 x 3.2 mm package

Applications

- 10/40/100 Gbps Ethernet, SONET, SATA, SAS, Fibre Channel
- Telecom, networking, instrumentation, storage, servers

INSTANT SAMPLES | SEARCH INVENTORY | GREEN SOLUTIONS | LIFETIME WARRANTY

Electrical Characteristics

All Min and Max limits in the Electrical Characteristics tables are specified over temperature and rated operating voltage with standard output termination shown in the termination diagrams. Typical values are at 25°C and nominal supply voltage.

Table 1. Electrical Characteristics – Common to LVPECL, LVDS and HCSL (All temperature ranges)

Parameter	Symbol	Min.	Typ.	Max.	Unit	Condition
Frequency Range						
Output Frequency Range	f	32 standard frequencies between 25 MHz and 325.000000 MHz			MHz	
Frequency Stability						
Frequency Stability	F_stab	-10	–	+10	ppm	Inclusive of initial tolerance, operating temperature, rated power supply voltage and load variations. Contact SiTime for ±10 ppm.
		-20	–	+20	ppm	Inclusive of initial tolerance, operating temperature, rated power supply voltage and load variations.
		-25	–	+25	ppm	
		-50	–	+50	ppm	
First Year Aging	F_1y	–	±1	–	ppm	At 25°C
Temperature Range						
Operating Temperature Range	T_use	-20	–	+70	°C	Extended Commercial
		-40	–	+85	°C	Industrial
		-40	–	+95	°C	
		-40	–	+105	°C	Extended Industrial
Supply Voltage						
Supply Voltage	Vdd	2.97	3.30	3.63	V	
		2.70	3.00	3.30	V	
		2.52	2.80	3.08	V	
		2.25	2.50	2.75	V	
Input Characteristics						
Input Voltage High	VIH	70%	–	–	Vdd	Pin 1, OE
Input Voltage Low	VIL	–	–	30%	Vdd	Pin 1, OE
Input Pull-up Impedance	Z_in	–	100	–	kΩ	Pin 1, OE logic high or logic low
Output Characteristics						
Duty Cycle	DC	45	–	55	%	
Startup and OE Timing						
Startup Time	T_start	–	–	3.0	ms	Measured from the time Vdd reaches its rated minimum value.
OE Enable/Disable Time	T_oe	–	–	3.8	µs	f = 156.25 MHz. Measured from the time OE pin reaches rated VIH and VIL to the time clock pins reach 90% of swing and high-Z. See Figure 6 and Figure 7.

Table 2. Electrical Characteristics – LVPECL

Parameter	Symbol	Min.	Typ.	Max.	Unit	Condition
Current Consumption						
Current Consumption	Idd	–	–	89	mA	Excluding Load Termination Current, Vdd = 3.3V or 2.5V
OE Disable Supply Current	I_OE	–	–	58	mA	OE = Low
Output Disable Leakage Current	I_leak	–	0.15	–	µA	OE = Low
Maximum Output Current	I_driver	–	–	30	mA	Maximum average current drawn from OUT+ or OUT-
Output Characteristics						
Output High Voltage	VOH	Vdd-1.1	–	Vdd-0.7	V	See Figure 2
Output Low Voltage	VOL	Vdd-1.9	–	Vdd-1.5	V	See Figure 2
Output Differential Voltage Swing	V_Swing	1.2	1.6	2.0	V	See Figure 3
Rise/Fall Time	Tr, Tf	–	225	290	ps	20% to 80%. See Figure 3
Jitter – 7.0 x 5.0 mm Package						
RMS Period Jitter[1]	T_jitt	–	1.0	1.6	ps	f = 100, 156.25 or 212.5 MHz, Vdd = 3.3V or 2.5V
RMS Phase Jitter (random)	T_phj	–	0.225	0.270	ps	f = 156.25 MHz, Integration bandwidth = 12 kHz to 20 MHz, all Vdd levels, includes spurs. Temperature ranges -20 to 70ºC and -40 to 85ºC
		–	0.225	0.300	ps	f = 156.25 MHz, Integration bandwidth = 12 kHz to 20 MHz, all Vdd levels, includes spurs. Temperature ranges -40 to 95ºC and -40 to 105ºC
		–	0.1	–	ps	f = 156.25 or 322.265625 MHz, IEEE802.3-2005 10GbE jitter mask integration bandwidth = 1.875 MHz to 20 MHz, includes spurs, all Vdd levels.
Jitter – 5.0 x 3.2 mm and 3.2 x 2.5 mm Packages						
RMS Period Jitter[1]	T_jitt	–	1.0	1.6	ps	f = 100, 156.25 or 212.5 MHz, Vdd = 3.3V or 2.5V
RMS Phase Jitter (random)		–	0.225	0.275	ps	f = 156.25 MHz, Integration bandwidth = 12 kHz to 20 MHz, all Vdd levels, includes spurs. Temperature ranges -20 to 70ºC and -40 to 85ºC
		–	0.225	0.340	ps	f = 156.25 MHz, Integration bandwidth = 12 kHz to 20 MHz, all Vdd levels, includes spurs. Temperature ranges -40 to 95ºC and -40 to 105ºC
		–	0.1	–	ps	f = 156.25 or 322.265625 MHz, IEEE802.3-2005 10GbE jitter mask integration bandwidth = 1.875 MHz to 20 MHz, includes spurs, all Vdd levels.

Notes:

1. Measured according to JESD65B.

Table 3. Electrical Characteristics – LVDS

Parameter	Symbol	Min.	Typ.	Max.	Unit	Condition
Current Consumption						
Current Consumption	Idd	–	–	79	mA	Excluding Load Termination Current, Vdd = 3.3V or 2.5V
OE Disable Supply Current	I_OE	–	–	58	mA	OE = Low
Output Disable Leakage Current	I_leak	–	0.15	–	µA	OE = Low
Output Characteristics						
Differential Output Voltage	VOD	250	–	450	mV	See Figure 4
VOD Magnitude Change	ΔVOD	–	–	50	mV	See Figure 4
Offset Voltage	VOS	1.125	–	1.375	V	See Figure 4
VOS Magnitude Change	ΔVOS	–	–	50	mV	See Figure 4
Rise/Fall Time	Tr, Tf	–	400	470	ps	Measured with 2 pF capacitive loading to GND, 20% to 80%. See Figure 5
Jitter – 7.0 x 5.0 mm Package						
RMS Period Jitter[2]	T_jitt	–	1.0	1.6	ps	f = 100, 156.25 or 212.5 MHz, Vdd = 3.3V or 2.5V
RMS Phase Jitter (random)	T_phj	–	0.215	0.265	ps	f = 156.25 MHz, Integration bandwidth = 12 kHz to 20 MHz, all Vdd levels, includes spurs. Temperature ranges -20 to 70ºC and -40 to 85ºC
		–	0.215	0.300	ps	f = 156.25 MHz, Integration bandwidth = 12 kHz to 20 MHz, all Vdd levels, includes spurs. Temperature ranges -40 to 95ºC and -40 to 105ºC
		–	0.1	–	ps	f = 156.25 or 322.265625 MHz, IEEE802.3-2005 10GbE jitter mask integration bandwidth = 1.875 MHz to 20 MHz, includes spurs, all Vdd levels.
Jitter – 5.0 x 3.2 and 3.2 x 2.5 mm Packages						
RMS Period Jitter[1]	T_jitt	–	1.0	1.6	ps	f = 100, 156.25 or 212.5 MHz, Vdd = 3.3V or 2.5V
RMS Phase Jitter (random)	T_phj	–	0.235	0.275	ps	f = 156.25 MHz, Integration bandwidth = 12 kHz to 20 MHz, all Vdd levels, includes spurs. Temperature ranges -20 to 70ºC and -40 to 85ºC
		–	0.235	0.320	ps	f = 156.25 MHz, Integration bandwidth = 12 kHz to 20 MHz, all Vdd levels, includes spurs. Temperature ranges -40 to 95ºC and -40 to 105ºC
		–	0.1	–	ps	f = 156.25 or 322.265625 MHz, IEEE802.3-2005 10GbE jitter mask integration bandwidth = 1.875 MHz to 20 MHz, includes spurs, all Vdd levels.

Notes:

2. Measured according to JESD65B

Table 4. Electrical Characteristics – HCSL

Parameter	Symbol	Min.	Typ.	Max.	Unit	Condition
Current Consumption						
Current Consumption	Idd	–	–	89	mA	Excluding Load Termination Current, Vdd = 3.3V or 2.5V
OE Disable Supply Current	I_OE	–	–	58	mA	OE = Low
Output Disable Leakage Current	I_leak	–	0.15	–	µA	OE = Low
Maximum Output Current	I_driver	–	–	35	mA	Maximum average current drawn from OUT+ or OUT-
Output Characteristics						
Output High Voltage	VOH	0.60	–	0.90	V	See Figure 2
Output Low Voltage	VOL	-0.05	–	0.08	V	See Figure 2
Output Differential Voltage Swing	V_Swing	1.2	1.4	1.80	V	See Figure 3
Rise/Fall Time	Tr, Tf	–	360	465	ps	Measured with 2 pF capacitive loading to GND, 20% to 80%. See Figure 3
Jitter – 7.0 x 5.0 mm Package						
RMS Period Jitter[3]	T_jitt	–	1.0	1.6	ps	f = 100, 156.25 or 212.5 MHz, Vdd = 3.3V or 2.5V
RMS Phase Jitter (random)	T_phj	–	0.220	0.270	ps	f = 156.25 MHz, Integration bandwidth = 12 kHz to 20 MHz, all Vdd levels, includes spurs. Temperature ranges -20 to 70ºC and -40 to 85ºC
		–	0.220	0.300	ps	f = 156.25 MHz, Integration bandwidth = 12 kHz to 20 MHz, all Vdd levels, includes spurs. Temperature ranges -40 to 95ºC and -40 to 105ºC
		–	0.1	–	ps	f = 156.25 or 322.265625 MHz, IEEE802.3-2005 10GbE jitter mask integration bandwidth = 1.875 MHz to 20 MHz, includes spurs, all Vdd levels.
Jitter – 5.0 x 3.2 and 3.2 x 2.5 mm Packages						
RMS Period Jitter[3]	T_jitt	–	1.0	1.6	ps	f = 100, 156.25 or 212.5 MHz, Vdd = 3.3V or 2.5V
RMS Phase Jitter (random)	T_phj	–	0.230	0.275	ps	f = 156.25 MHz, Integration bandwidth = 12 kHz to 20 MHz, all Vdd levels, includes spurs. Temperature ranges -20 to 70ºC and -40 to 85ºC
		–	0.230	0.340	ps	f = 156.25 MHz, Integration bandwidth = 12 kHz to 20 MHz, all Vdd levels, includes spurs. Temperature ranges -40 to 95ºC and -40 to 105ºC
		–	0.1	–	ps	f = 156.25 or 322.265625 MHz, IEEE802.3-2005 10GbE jitter mask integration bandwidth = 1.875 MHz to 20 MHz, includes spurs, all Vdd levels.

Notes:
3. Measured according to JESD65B

Table 5. Pin Description

Pin	Map	Functionality	
1	OE/NC	Output Enable (OE)	H[4]: specified frequency output L: output is high impedance
		Non Connect (NC)	H or L or Open: No effect on output frequency or other device functions
2	NC	NA	No Connect; Leave it floating or connect to GND for better heat dissipation
3	GND	Power	VDD Power Supply Ground
4	OUT+	Output	Oscillator output
5	OUT-	Output	Complementary oscillator output
6	VDD	Power	Power supply voltage[5]

Notes:
4. In OE mode, a pull-up resistor of 10 kΩ or less is recommended if pin 1 is not externally driven.
5. A capacitor of value 0.1 µF or higher between Vdd and GND is required. An additional 10 µF capacitor between Vdd and GND is required for the best phase jitter performance

Top View

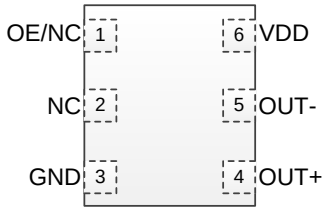

Figure 1. Pin Assignments

Table 6. Absolute Maximum Ratings

Attempted operation outside the absolute maximum ratings may cause permanent damage to the part.
Actual performance of the IC is only guaranteed within the operational specifications, not at absolute maximum ratings.

Parameter	Min.	Max.	Unit
Vdd	-0.5	4.0	V
VIH		Vdd + 0.3V	V
VIL	-0.3		V
Storage Temperature	-65	150	ºC
Maximum Junction Temperature		130	ºC
Soldering Temperature (follow standard Pb-free soldering guidelines)		260	ºC

Table 7. Thermal Considerations[6]

Package	θ_{JA}, 4 Layer Board (°C/W)	θ_{JC}, Bottom (°C/W)
3225, 6-pin	80	30
5032, 6-pin	TBD	TBD
7050, 6-pin	52	19

Notes:

6. Refer to JESD51 for θ_{JA} and θ_{JC} definitions, and reference layout used to determine the θ_{JA} and θ_{JC} values in the above table.

Table 8. Maximum Operating Junction Temperature[7]

Max Operating Temperature (ambient)	Maximum Operating Junction Temperature
70°C	95°C
85°C	110°C
95°C	120°C
105°C	130°C

Notes:

7. Datasheet specifications are not guaranteed if junction temperature exceeds the maximum operating junction temperature.

Table 9. Environmental Compliance

Parameter	Test Conditions	Value	Unit
Mechanical Shock Resistance	MIL-STD-883F, Method 2002	10,000	*g*
Mechanical Vibration Resistance	MIL-STD-883F, Method 2007	70	*g*
Soldering Temperature (follow standard Pb free soldering guidelines)	MIL-STD-883F, Method 2003	260	°C
Moisture Sensitivity Level	MSL1 @ 260°C		
Electrostatic Discharge (HBM)	HBM, JESD22-A114	2,000	V
Charge-Device Model ESD Protection	JESD220C101	750	V
Latch-up Tolerance	JESD78 Compliant		

Waveform Diagrams

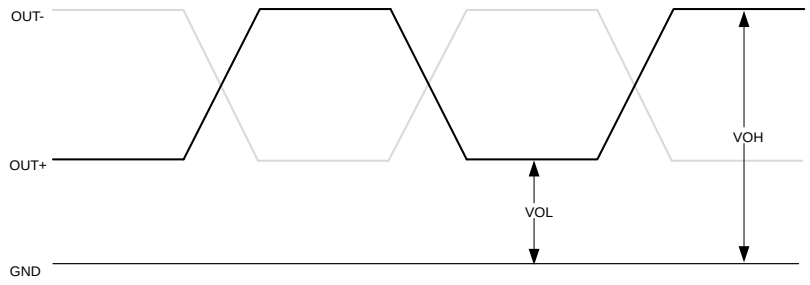

Figure 2. LVPECL/HCSL Voltage Levels per Differential Pin (OUT+/OUT-)

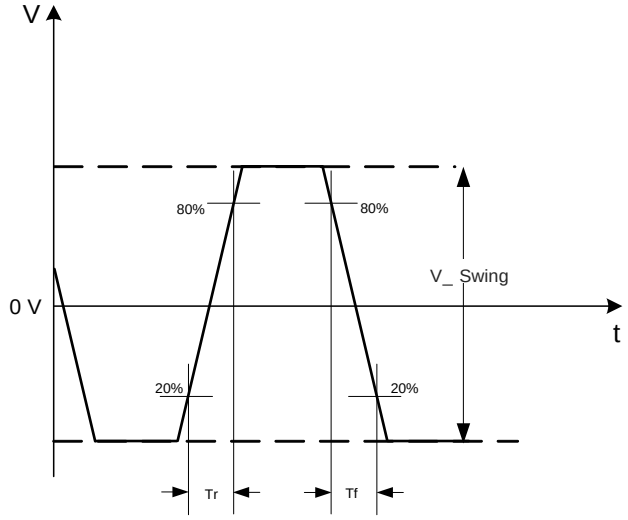

Figure 3. LVPECL/HCSL Voltage Levels Across Differential Pair

Waveform Diagrams (continued)

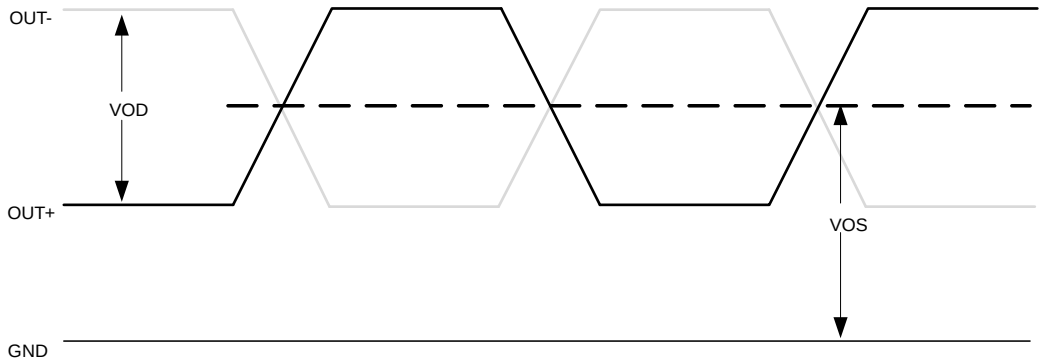

Figure 4. LVDS Voltage Levels per Differential Pin (OUT+/OUT-)

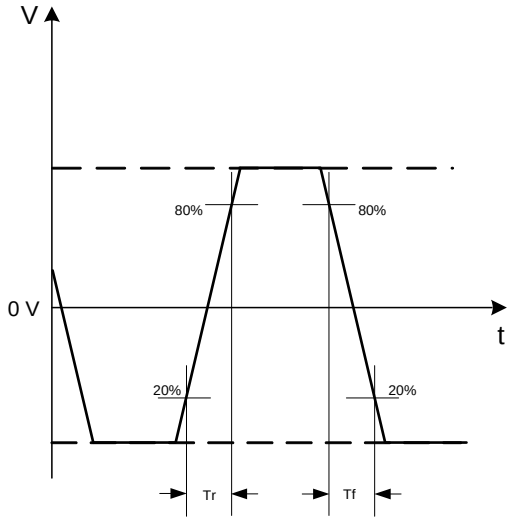

Figure 5. LVDS Differential Waveform

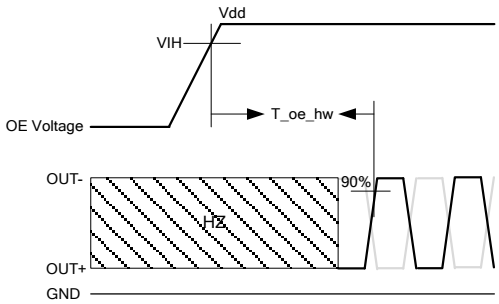

Figure 6. Hardware OE Enable Timing

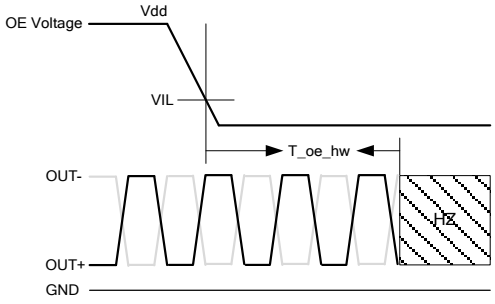

Figure 7. Hardware OE Disable Timing

Termination Diagrams

LVPECL:

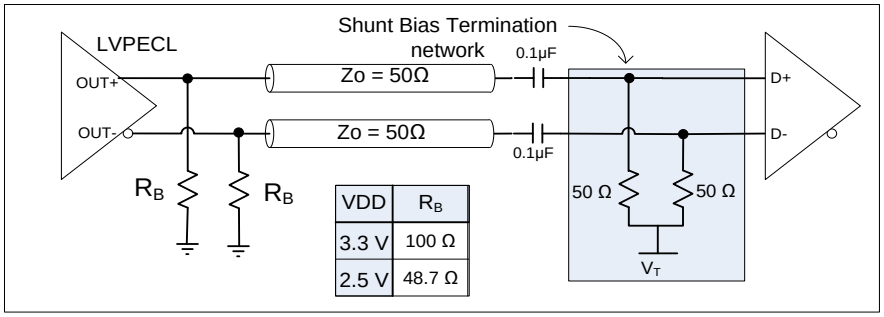

Figure 8. LVPECL with AC-coupled Termination

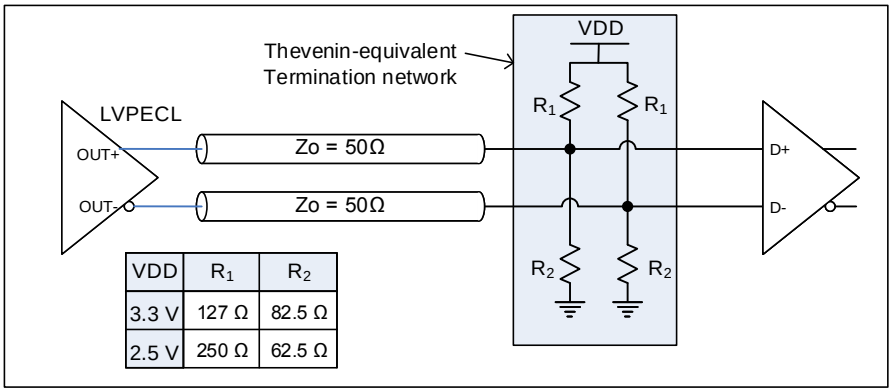

Figure 9. LVPECL DC-coupled Load Termination with Thevenin Equivalent Network

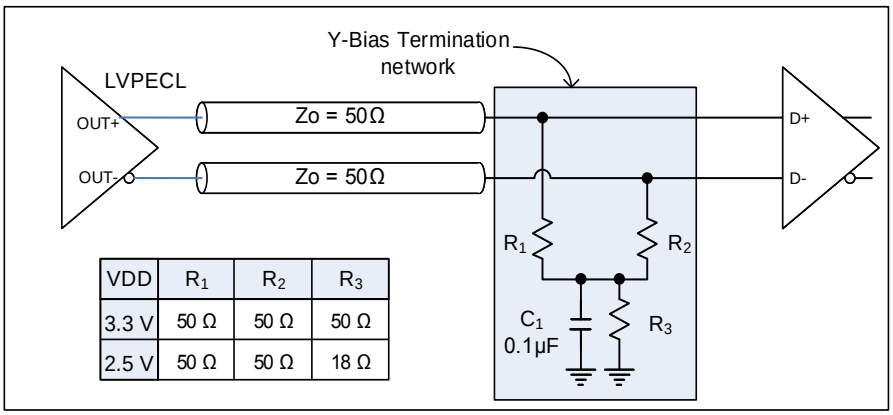

Figure 10. LVPECL with Y-Bias Termination

Termination Diagrams (continued)

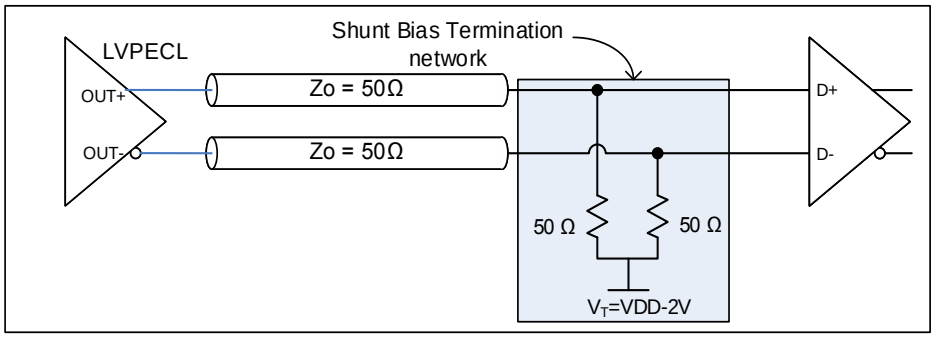

Figure 11. LVPECL with DC-coupled Parallel Shunt Load Termination

Termination Diagrams (continued)

LVDS:

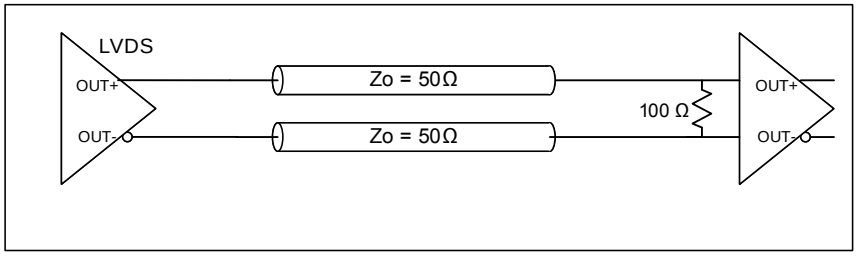

Figure 12. LVDS Single DC Termination at the Load

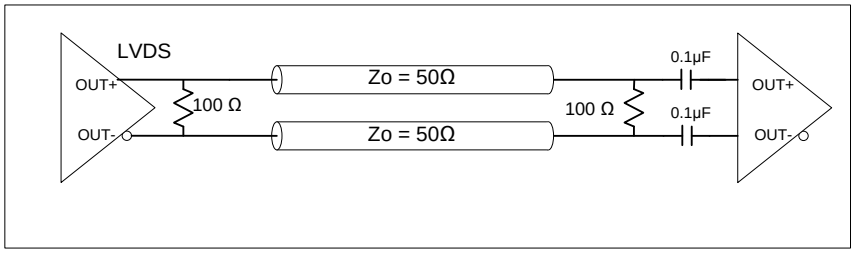

Figure 13. LVDS double AC Termination with Capacitor Close to the Load

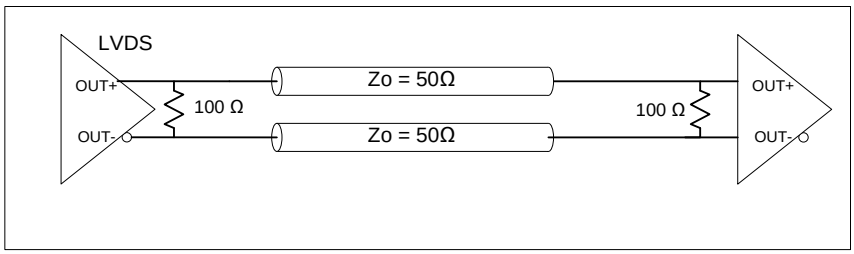

Figure 14. LVDS Double DC Termination

Termination Diagrams (continued)

HCSL:

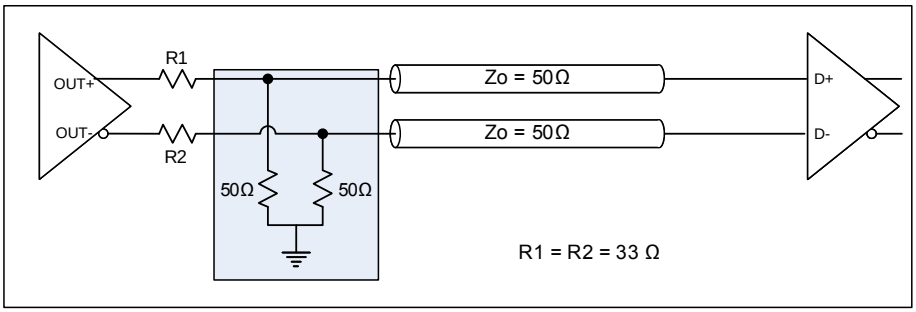

Figure 15. HCSL Interface Termination

Dimensions and Patterns

Package Size – Dimensions (Unit: mm)[8]	Recommended Land Pattern (Unit: mm)[9]

3.2 x 2.5 x 0.85 mm

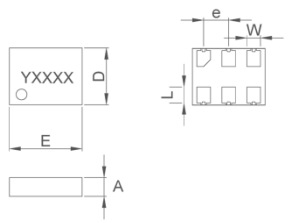

Dimension Table

		Symbol	Min	Nom	Max
TOTAL THICKNESS		A	0.800	0.850	0.900
BODY SIZE	X	D	2.400	2.500	2.600
	Y	E	3.200	3.200	3.300
LEAD PITCH		e	1.100 BSC		
LEAD LENGTH		L	0.650	0.700	0.750
LEAD WIDTH		W	0.550	0.600	0.650

6L QFN	Package Outline
3.2 x 2.5 x 0.75 mm	
POD-38 Rev A	

3.2 x 2.5 x 0.85 mm

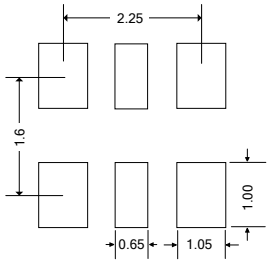

5.0 x 3.2 x 0.85 mm[10]

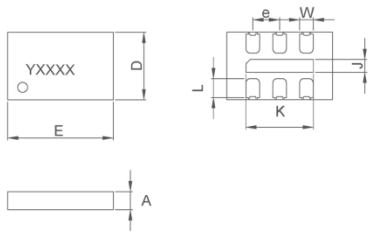

Dimension Table

		Symbol	Min	Nom	Max
TOTAL THICKNESS		A	0.800	0.850	0.900
BODY SIZE	X	D	3.100	3.200	3.300
	Y	E	4.900	5.000	5.100
EP SIZE	X	J	0.500	0.600	0.700
	Y	K	3.100	3.200	3.300
LEAD PITCH		e	1.270 BSC		
LEAD LENGTH		L	0.850	0.900	0.950
LEAD WIDTH		W	0.590	0.640	0.690

6L QFN	Package Outline
5.0 x 3.2 x 0.85 mm	
POD-39 Rev A	

5.0 x 3.2 x 0.85 mm[10]

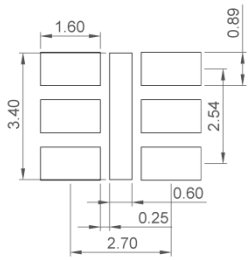

7.0 x 5.0 x 0.85 mm[10]

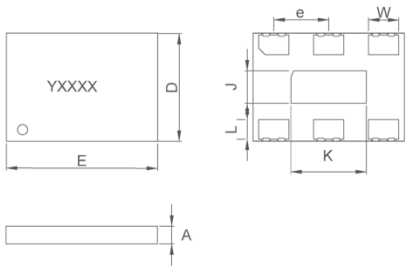

Dimension Table

		Symbol	Min	Nom	Max
TOTAL THICKNESS		A	0.800	0.850	0.900
BODY SIZE	X	D	4.900	5.000	5.100
	Y	E	6.900	7.000	7.100
EP SIZE	X	J	1.400	1.500	1.600
	Y	K	3.400	3.500	3.600
LEAD PITCH		e	2.540 BSC		
LEAD LENGTH		L	0.850	0.900	0.950
LEAD WIDTH		W	1.350	1.400	1.450

6L QFN	Package Outline
7.0 x 5.0 x 0.90 mm	
POD-37 Rev A	

7.0 x 5.0 x 0.85 mm[10]

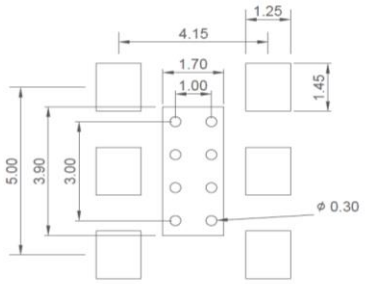

Note:
Circles in center pad are thermal vias, recommended to improve thermal performance

Notes:

8. Top Marking: Y denotes manufacturing origin and XXXX denotes manufacturing lot number. The value of "Y" will depend on the assembly location of the device.
9. A capacitor of value 0.1 µF or higher between Vdd and GND is required. An additional 10 µF capacitor between Vdd and GND is required for the best phase jitter performance.
10. The center pad has no electrical function. Soldering down the center pad to the GND is recommended for best thermal dissipation, but is optional.

Ordering Information

SiT9365AC-1B2-33E125.000000T

Part Family
"SiT9365"

Revision Letter
"A" is the revision of Silicon

Temperature Range
"C": Extended Commercial, -20 to 70°C
"I": Industrial, -40 to 85°C
"B": -40 to 95 °C
"E": Extended Industrial, -40 to 105°C

Signalling Type
"1": LVPECL
"2": LVDS
"4": HCSL

Package Size
"B": 3.2 x 2.5 mm
"C": 5.0 x 3.2 mm with center pad
"E": 7.0 x 5.0 mm with center pad

Frequency Stability
"F": ±10 ppm[11]
"1": ±20 ppm
"2": ±25 ppm
"3": ±50 ppm

Packaging
"T", "Y", "D" or "E"
Refer to table below for packing method
Leave Blank for Bulk[12]

Frequency
See supported frequency list below

Feature Pin
"N": No Connect
"E": Output Enable

Voltage Supply
"25": 2.5 V ±10%
"28": 2.8 V ±10%
"30": 3.0 V ±10%
"33": 3.3 V ±10%

扫一扫关注我们，获取更多资讯

Notes:
11. Contact SiTime for ±10 ppm option.
12. Bulk is available for sampling only.

Table 10. Supported Frequencies

25.000000 MHz	30.720000 MHz	50.000000 MHz	53.125000 MHz	61.440000 MHz	62.500000 MHz	74.175824 MHz	74.250000 MHz
75.000000 MHz	77.760000 MHz	98.304000 MHz	100.000000 MHz	106.250000 MHz	122.880000 MHz	125.000000 MHz	133.333333 MHz
148.351648 MHz	150.000000 MHz	153.600000 MHz	155.520000 MHz	156.250000 MHz	159.375000 MHz	160.000000 MHz	161.132813 MHz
166.666666 MHz	168.040678 MHz	200.000000 MHz	212.500000 MHz	250.000000 MHz	300.000000 MHz	322.265625 MHz	325.000000 MHz

Table 11. Ordering Codes for Supported Tape & Reel Packing Method

Device Size (mm x mm)	8 mm T&R (3ku)	8 mm T&R (1ku)	12 mm T&R (3ku)	12 mm T&R (1ku)	16 mm T&R (3ku)	16 mm T&R (1ku)
7.0 x 5.0	—	—	—	—	T	Y
5.0 x 3.2			T	Y		
3.2 x 2.5	D	E			—	—

Table 12. Additional Information

Document	Description	Download Link
ECCN #: EAR99	Five character designation used on the commerce Control List (CCL) to identify dual use items for export control purposes.	—
Part number Generator	Tool used to create the part number based on desired features.	—
Manufacturing Notes	Tape & Reel dimension, reflow profile and other manufacturing related info	http://www.sitime.com/manufacturing-notes
Qualification Reports	RoHS report, reliability reports, composition reports	http://www.sitime.com/support/quality-and-reliability
Performance Reports	Additional performance data such as phase noise, current consumption and jitter for selected frequencies	http://www.sitime.com/support/performance-measurement-report
Termination Techniques	Termination design recommendations	http://www.sitime.com/support/application-notes
Layout Techniques	Layout recommendations	http://www.sitime.com/support/application-notes

Table 13. Revision History

Revision	Release Date	Change Summary
1.0	09/06/2017	Final release
1.04	04/17/2018	Added 5032 package. Added -40 to 95C and -40 to 105C temperature ranges Corrected minor errors Added Additional Information Table.
1.05	07/03/2018	Performed minor edits and updated Ordering Information.

© SiTime Corporation 2017-2018. The information contained herein is subject to change at any time without notice. SiTime assumes no responsibility or liability for any loss, damage or defect of a Product which is caused in whole or in part by (i) use of any circuitry other than circuitry embodied in a SiTime product, (ii) misuse or abuse including static discharge, neglect or accident, (iii) unauthorized modification or repairs which have been soldered or altered during assembly and are not capable of being tested by SiTime under its normal test conditions, or (iv) improper installation, storage, handling, warehousing or transportation, or (v) being subjected to unusual physical, thermal, or electrical stress.

Disclaimer: SiTime makes no warranty of any kind, express or implied, with regard to this material, and specifically disclaims any and all express or implied warranties, either in fact or by operation of law, statutory or otherwise, including the implied warranties of merchantability and fitness for use or a particular purpose, and any implied warranty arising from course of dealing or usage of trade, as well as any common-law duties relating to accuracy or lack of negligence, with respect to this material, any SiTime product and any product documentation. Products sold by SiTime are not suitable or intended to be used in a life support application or component, to operate nuclear facilities, or in other mission critical applications where human life may be involved or at stake. All sales are made conditioned upon compliance with the critical uses policy set forth below.

CRITICAL USE EXCLUSION POLICY
BUYER AGREES NOT TO USE SITIME'S PRODUCTS FOR ANY APPLICATION OR IN ANY COMPONENTS USED IN LIFE SUPPORT DEVICES OR TO OPERATE NUCLEAR FACILITIES OR FOR USE IN OTHER MISSION-CRITICAL APPLICATIONS OR COMPONENTS WHERE HUMAN LIFE OR PROPERTY MAY BE AT STAKE.

SiTime owns all rights, title and interest to the intellectual property related to SiTime's products, including any software, firmware, copyright, patent, or trademark. The sale of SiTime products does not convey or imply any license under patent or other rights. SiTime retains the copyright and trademark rights in all documents, catalogs and plans supplied pursuant to or ancillary to the sale of products or services by SiTime. Unless otherwise agreed to in writing by SiTime, any reproduction, modification, translation, compilation, or representation of this material shall be strictly prohibited.